2.3L MAF-SFI OHC
(VIN Code S)

1992–1993
Mustang
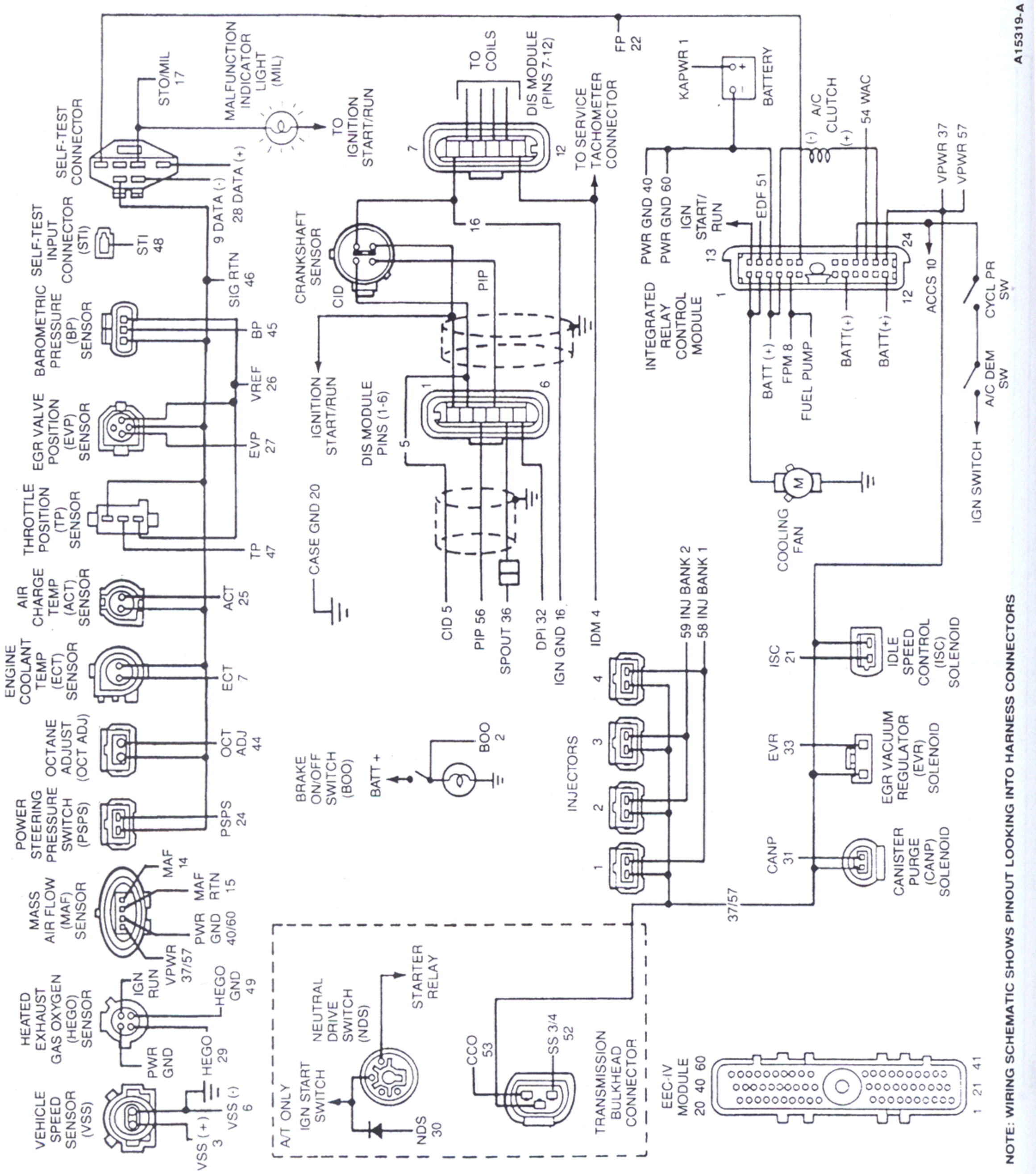
VIN: 1 2 3 4 5 6 7 8 ... 17
Engine code